ARIZONA LEATHER INTERIORS

We are the Leather Experts
www.arizonaleather.com

Quincy

Standard, Armless & Ottomans (All 4 seat items ship as one piece if stationary, two pieces if motion installed)

Put Green Arrows with Red Arrows to Create Sectional Groups

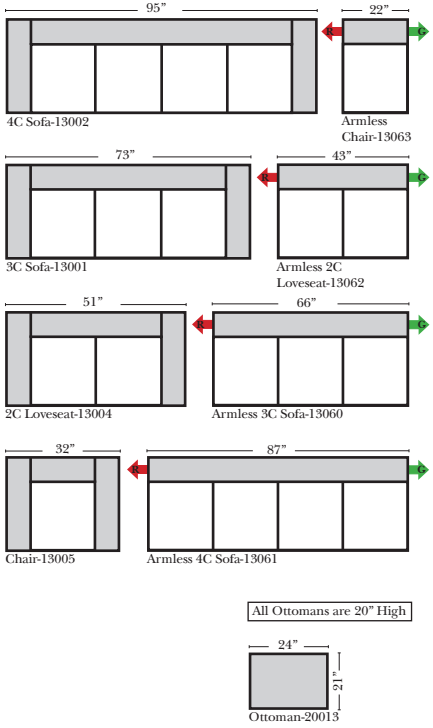

2 Piece Curve Sectional & Ottomans

v.08.15.17

Put Blue Arrows with Yellow Arrows to Create Sectional Groups or Green Arrows with Red Arrows to mix with some of the L-Shaped pieces.

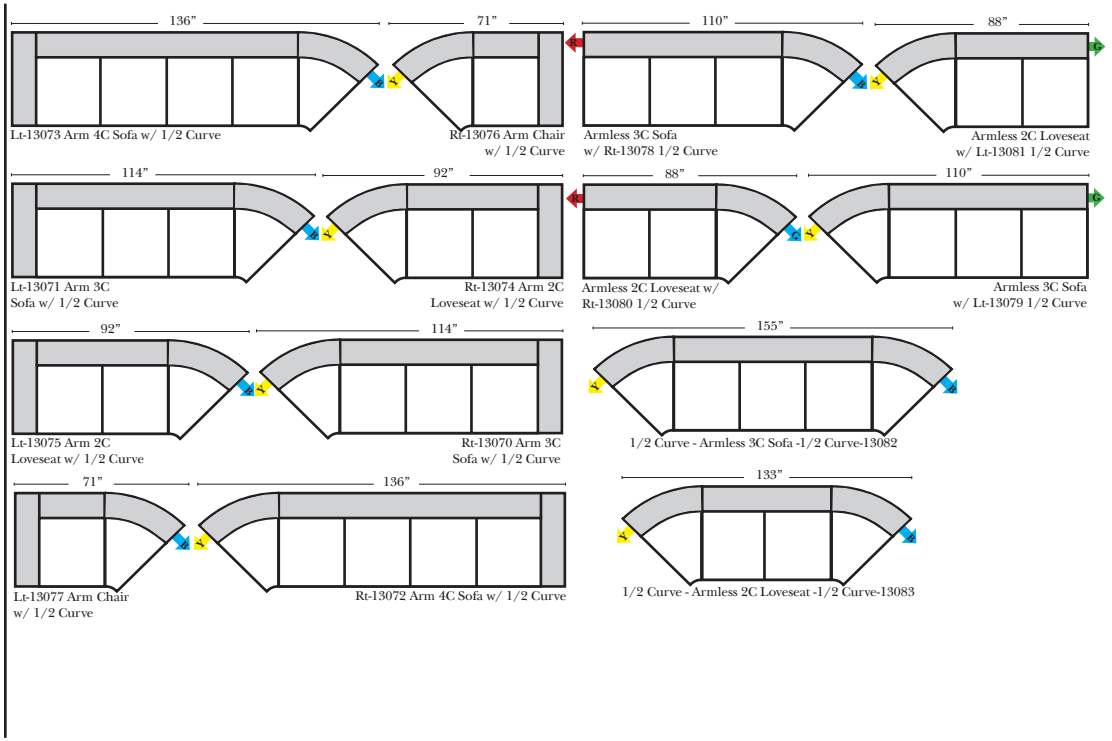

L-Shape / 90 Degree Sectional

(All 4 seat items ship as one piece if stationary, two pieces if motion installed)

Put Green Arrows with Red Arrows to Create Sectional Groups

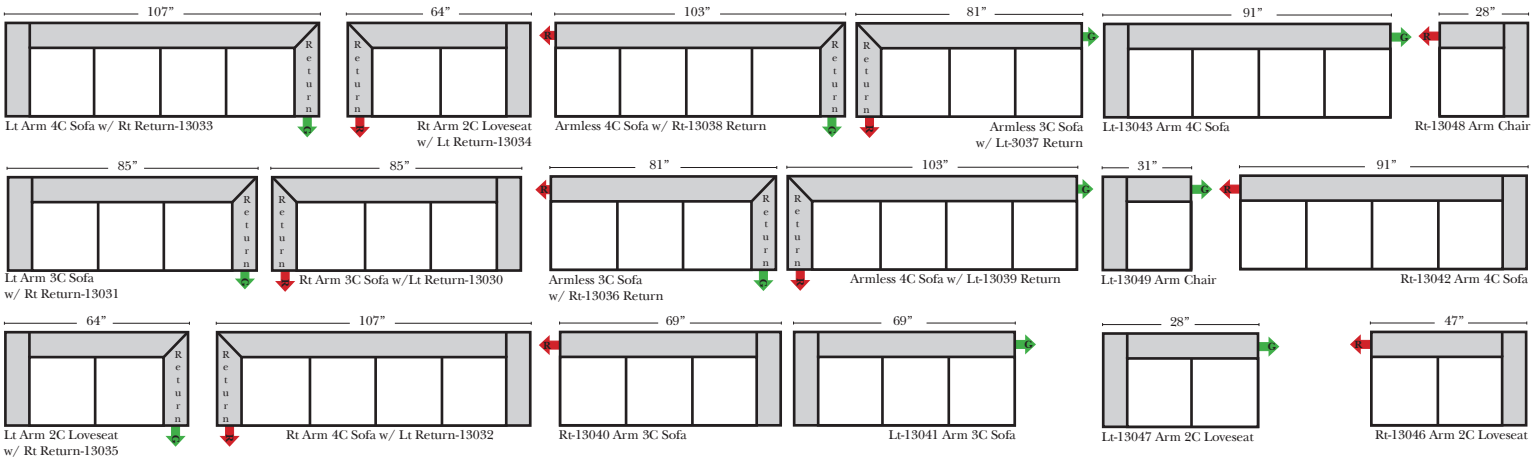

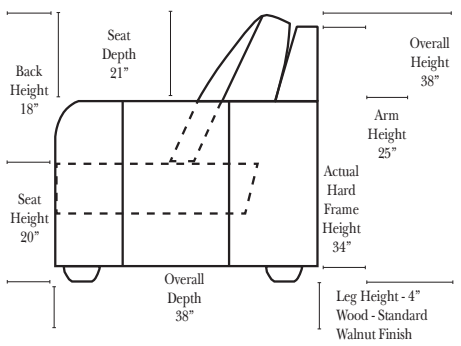

Specifications & Options

Standard:

- Available in Full & Top Grain Leathers
- Available in Luxury Fabrics
- All Hardwood Frames
- Leg Color - Walnut

Options Available with No Additional Charge:

- Change Leg Color to: Cherry, Chocolate, Espresso, Honey Oak, & Shadow
- No. 33 Firm Foam

Options that have Additional Charges:

- Add Down Seats & Backs

Sleeper Options : **(Sleepers not available at this time)**

N/A



Note:

All Dimensions are approximate, if accuracy is crucial, please contact us for validation of the dimensions shown. However, a 1" to 2" variance can still apply due to foam and upholstery.

ARIZONA LEATHER INTERIORS

We are the Leather Experts
www.arizonaleather.com

Quincy

Chaise & Conversation Sectionals

Put Green Arrows with Red Arrows to Create Sectional Groups

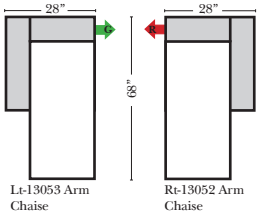

Conversation Sectionals
for this style not available
at this time

Sleepers

Put Green Arrows with Red Arrows to Create Sectional Groups
Put Blue Arrows with Yellow Arrows to Create Sectional Groups

Sleepers
for this style not available
at this time

Suggested Configurations

v.08.15.17

The Suggested Configurations below are only a sample of what the imagination can create, please enjoy creating the configuration that fits your lifestyle, using the ideas below and from the items on the opposite page.

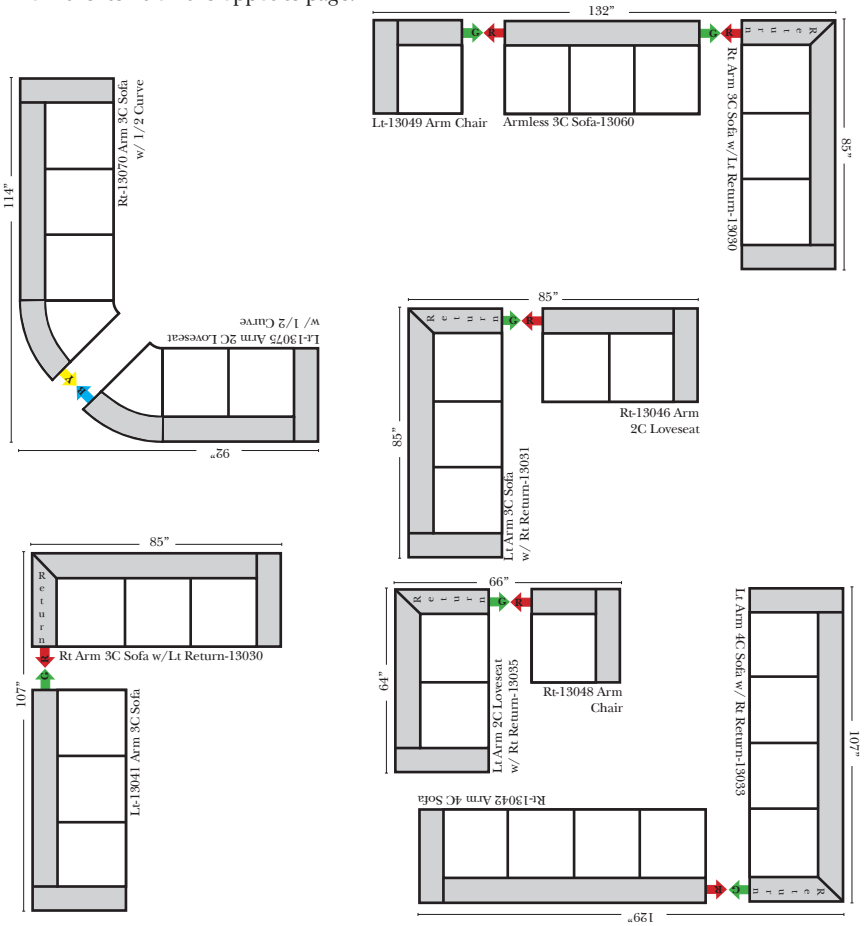

Sleepers (Cont.)