ARIZONA LEATHER INTERIORS

We are the Leather Experts
www.arizonaleather.com

Maxximus 3
(Deluxe or Studio)

Standard / Ottomans / Armless

Put Green Arrows with Red Arrows to Create Sectional Groups

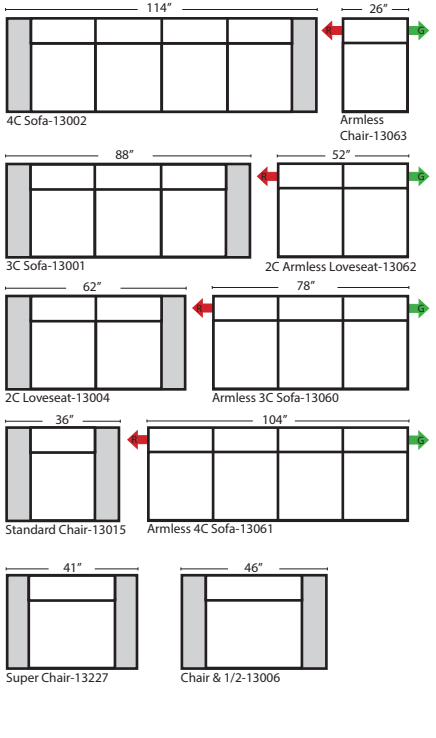

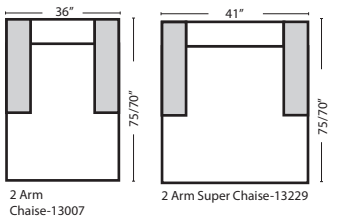

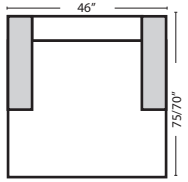

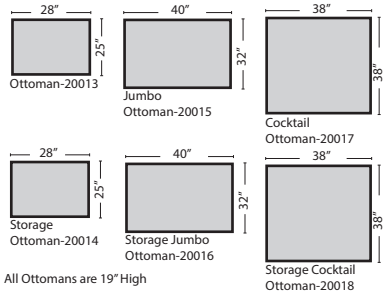

All Ottomans are 19″ High

Additional Sectional Items

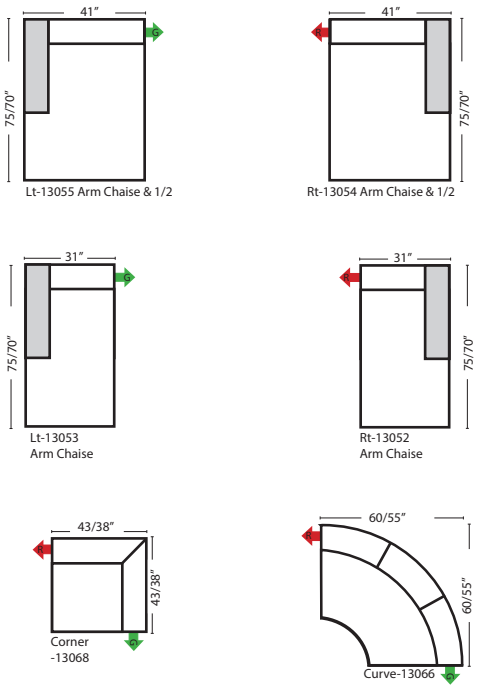

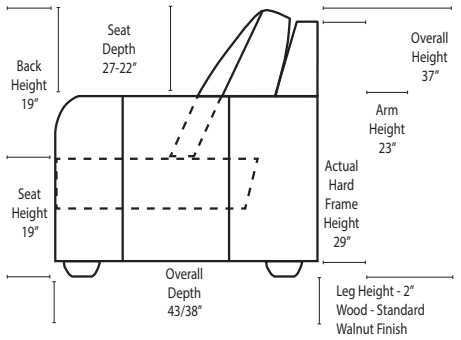

Standard & options

Standard:
- Available in Full & Top Grain Leathers
- Available in Luxury Fabrics
- Seat Cushions are foam crowned with Memor Gel
- All Hardwood Frames
- Wood Leg Finish (Standard is Walnut)

Options: (No Additional Charge
- Wood Leg Finish(Available in Cherry, Chocolate, Espresso, Honey Oak, & Shadow)

Options: (additional Charge)
- Down Seats & Down Backs
- Upholstered Swivel Base(2 arm Chair Only) (Not available on Super Chair or Chair & 1/2)

Sleeper Options: (N/A on this Style)

L-Shape / 90 Degree Sectional

(All 4 seat items ship as one piece if stationary, two pieces if motion installed)

Put Green Arrows with Red Arrows to Create Sectional Groups

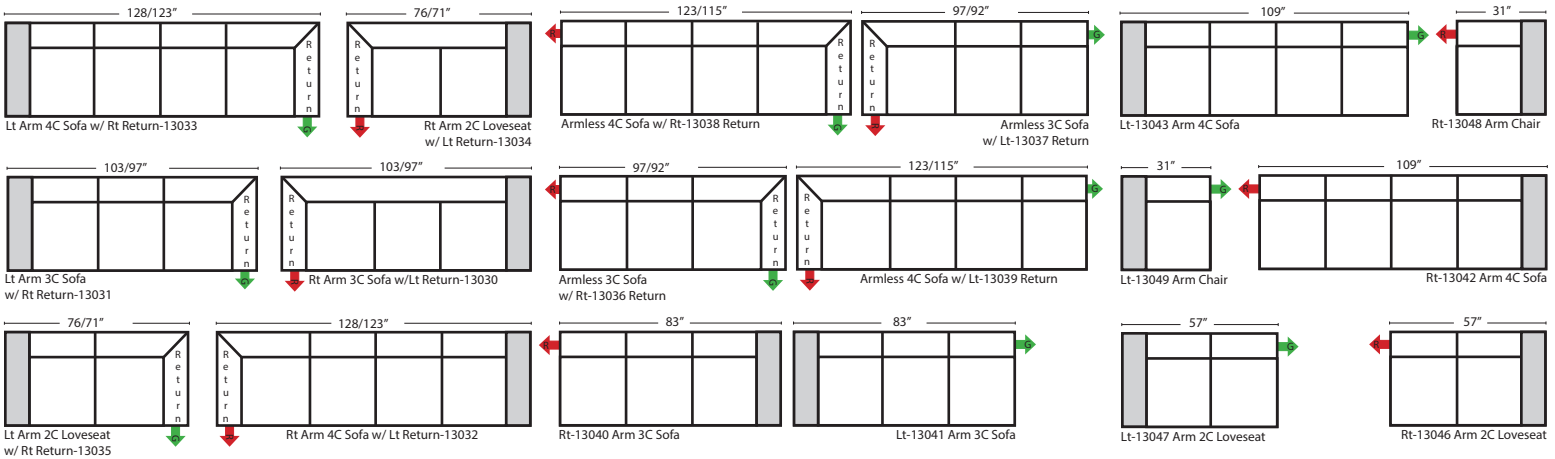



Note:
All Dimensions are approximate, if accuracy is crucial, please contact us for validation of the dimensions shown. However, a 1″ to 2″ variance can still apply due to foam and upholstery.

v.05.14.24

ARIZONA LEATHER INTERIORS

We are the Leather Experts
www.arizonaleather.com

Maxximus 3
(Deluxe or Studio)

Bumper / Return Chaise & Conversation Sofas

Put Green Arrows with Red Arrows to Create Sectional Groups

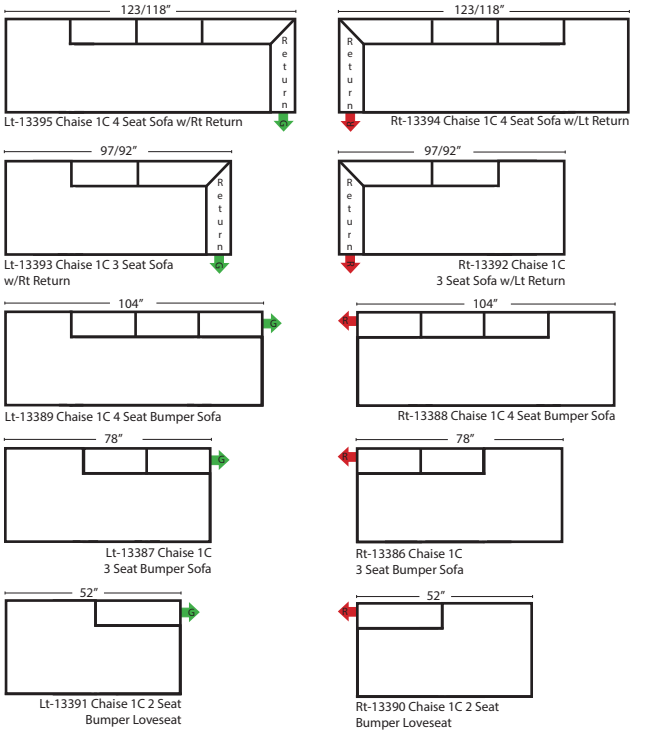

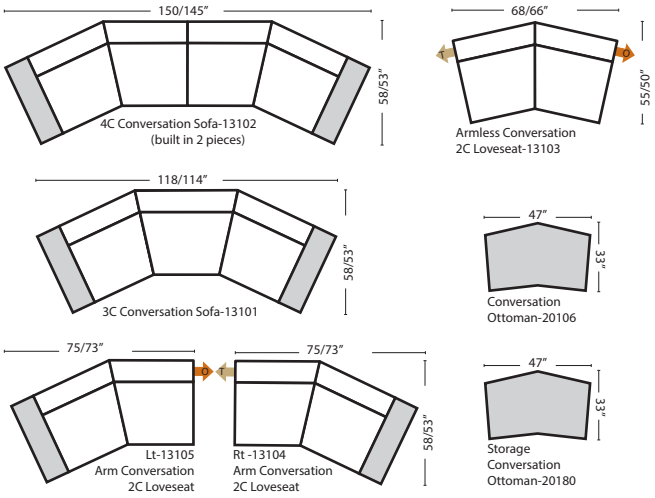

Sleepers N/A

Sleepers not available for this style

Suggested Configurations

v.05.14.24

The Suggested Configurations below are only a sample of what the imagination can create, please enjoy creating the configuration that fits your lifestyle, using the ideas below and from the items on the opposite page.

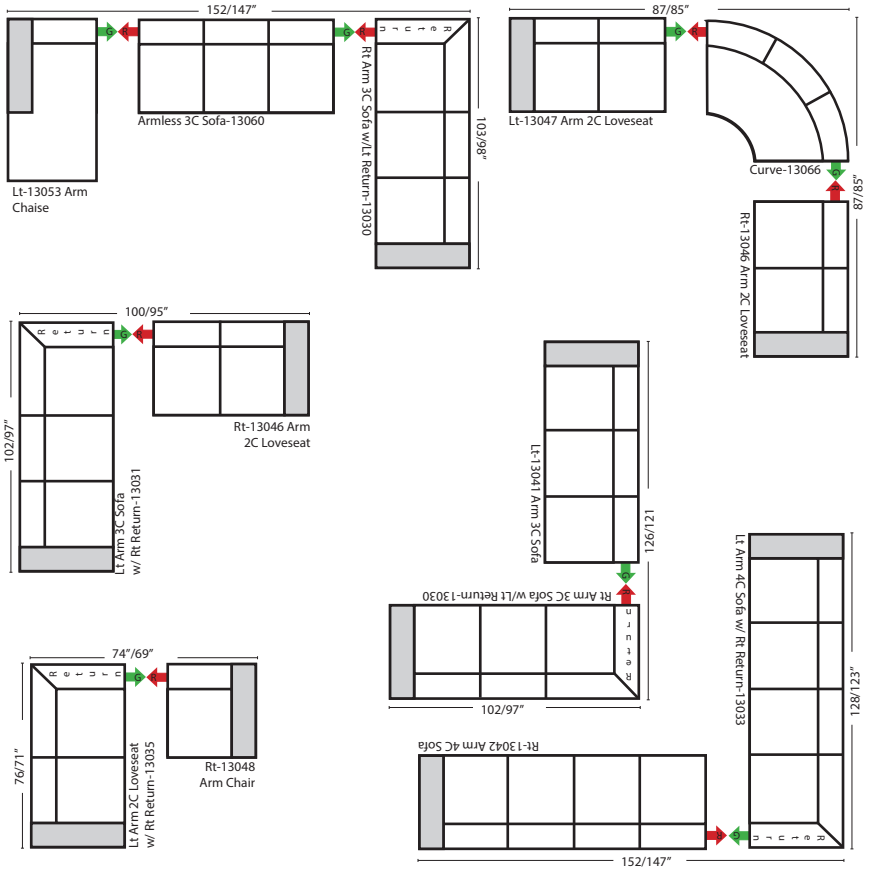

Sleepers (Cont.)