ARIZONA LEATHER INTERIORS

We are the Leather Experts
www.arizonaleather.com

Hartford

Standard, Armless & Ottomans

Put Green Arrows with Red Arrows to Create Sectional Groups

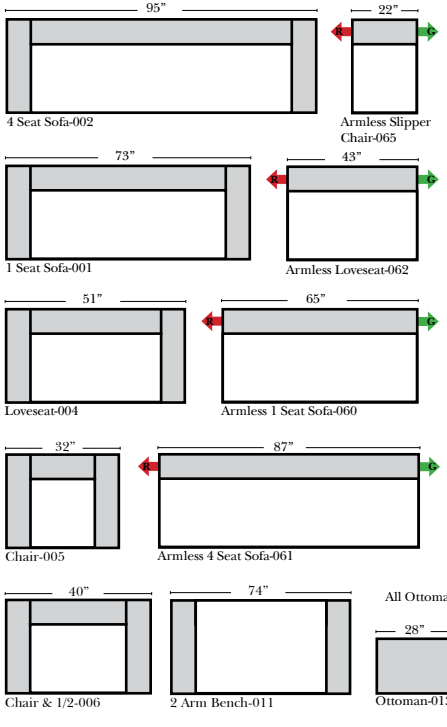

Chaise & Return Chaise

Green Arrows with Red Arrows to mix with some of the L-Shaped pieces.

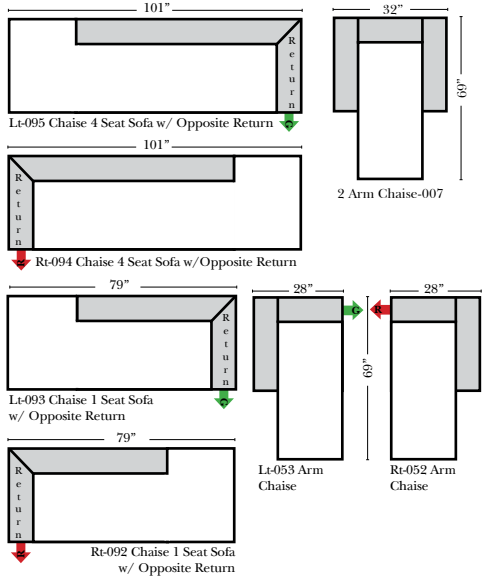

Suggested Configurations

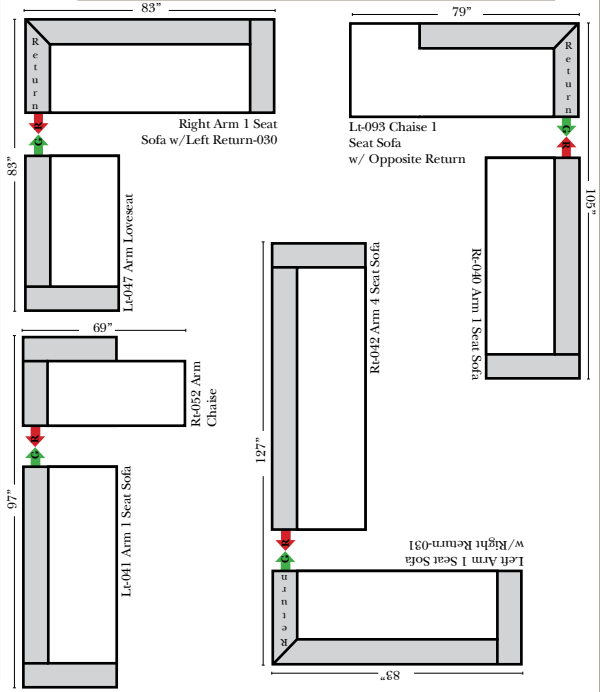

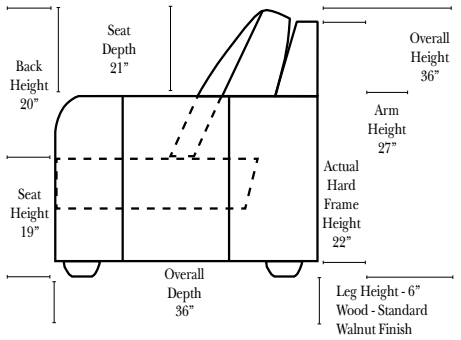

Features

Standard:
- Available in Full & Top Grain Leathers
- Available in Luxury Fabrics
- All Hardwood Frames

Options:
- Down Backs (additional Charge)
- No. 33 Firm Foam

Sleeper Options: **(No Sleepers are available for this style)**

Note:

All Dimensions are approximate, if accuracy is crucial, please contact us for validation of the dimensions shown. However, a 1" to 2" variance can still apply due to foam and upholstery.



L-Shape / 90 Degree Sectional

(All 4 seat items ship as one piece if stationary, two pieces if motion installed)

Put Green Arrows with Red Arrows to Create Sectional Groups

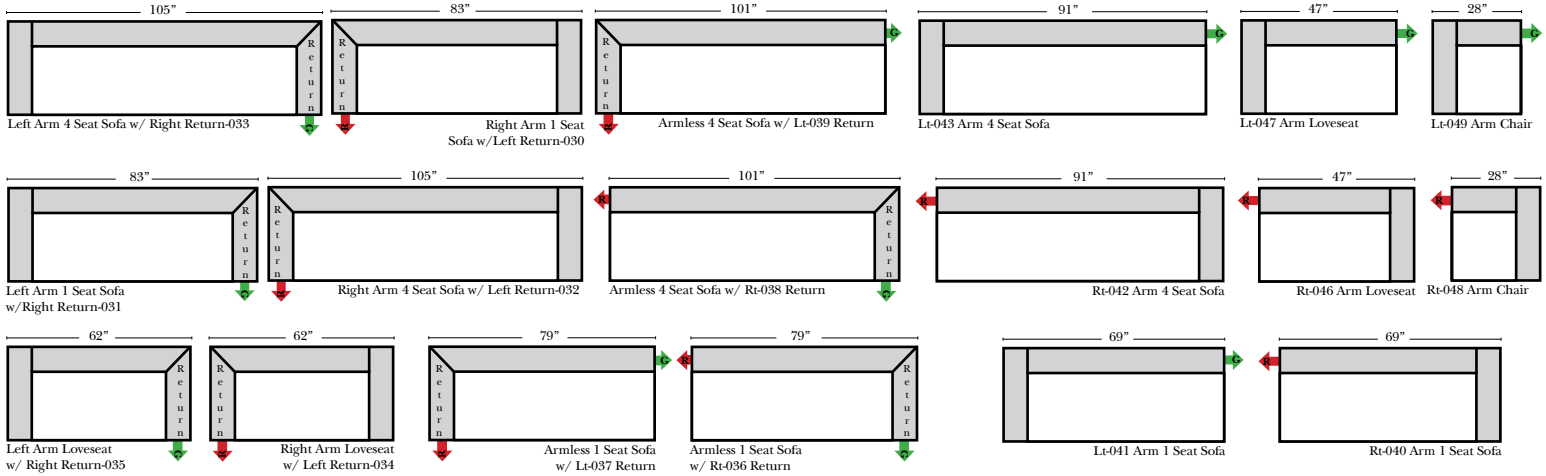

09/18/2017